EFL352B3

4-WHEEL LI-ION COUNTERBALANCE FORKLIFT 3.5T

3500 kg | 6000 mm | 80 V Li-Ion

The EFL302B3 and EFL352B3 are engineered for demanding indoor and outdoor applications. With their robust chassis, high ground clearance, and IPX4 water resistance, these forklifts excel in rugged environments like construction sites, logistics yards, and manufacturing plants. Their compact design and lower battery placement ensure stability on uneven terrain, making them ideal for heavy-duty material handling tasks in both rain and shine, from loading docks to spacious warehouses.

SPECIFICATION	REF	UNIT	VALUE
Manufacturer			EP
Model designation			EFL352B3
Battery voltage		V	80
Battery voltage/nominal capacity		V/Ah	80V280AH
Rated capacity	Q	kg	3500
Load centre distance	c	mm	500
Service weight		kg	4684
Height, mast lowered	h_1	mm	2070
Lift	h_3	mm	3000
Height, mast extended	h_4	mm	4110
Overall length	l_1	mm	3820
Overall width	b_1/b_2	mm	1230
Length to face of forks	l_2	mm	2750
Fork dimensions	s/e/l	mm	50×122×1070
Turning radius	Wa	mm	2437
Drive			Electric

Copyright 2026 EP Equipment. All rights reserved. | Datasheet last updated 2026-09-15

Features

Enhanced mast for better visibility and stability

IPX4 water resistance

Adjustable steering wheel

Spacious operator space

80V205Ah/280Ah Li-ion battery and 35A/60A charger

Lower battery placement for enhanced stability

Big tyres and high ground clearance

VDI Chart

	SPECIFICATION	REF	UNIT	VALUE
1.1	Manufacturer			EP
1.2	Model designation			EFL352B3
1.3	Drive			Electric
1.4	Operator type			Seated
1.5	Rated capacity	Q	kg	3500
1.6	Load centre distance	c	mm	500
1.8	Load distance, centre of drive axle to fork	x	mm	486
1.9	Wheelbase	y	mm	1750
2.1	Service weight		kg	4684
2.2	Axle loading, laden front/rear		kg	7510/700
2.3	Axle loading, unladen front/rear		kg	1916/2784

Copyright 2026 EP Equipment. All rights reserved. | Datasheet last updated 2026-09-15

	SPECIFICATION	REF	UNIT	VALUE
3.1	Tyres			Pneumatic
3.2	Tyre size, front		mm	28X9-15-14PR
3.3	Tyre size, rear		mm	6.50-10-10PR
3.5	Wheels, number front/rear (x=drive wheels)			2x/2
3.6	Tread width, front	b_{10}	mm	1010
3.7	Tread width, rear	b_{11}	mm	980
4.1	Tilt of mast/fork carriage forward/backward	α/β	°	6/10
4.2	Height, mast lowered	h_1	mm	2070
4.3	Free lift	h_2	mm	120
4.4	Lift	h_3	mm	3000
4.5	Height, mast extended	h_4	mm	4110
4.7	Height of overhead guard (cabin)	h6	mm	2180
4.8	Seat height relating to SIP/stand height	h7	mm	1130
4.12	Coupling height	h10	mm	350
4.19	Overall length	l_1	mm	3820
4.20	Length to face of forks	l_2	mm	2750
4.21	Overall width	b_1/b_2	mm	1230
4.22	Fork dimensions	s/e/l	mm	50×122×1070
4.23	Fork carriage ISO 2328, class/type A, B			3A
4.24	Fork carriage width	b_3	mm	1150
4.31	Ground clearance, laden, below mast	m_1	mm	120
4.32	Ground clearance, centre of wheelbase	m_2	mm	150
4.34.1	Aisle width for pallets 1000×1200 crossways	Ast	mm	4118
4.34.2	Aisle width for pallets 800 × 1200 lengthways	Ast	mm	4318
4.35	Turning radius	Wa	mm	2437
5.1	Travel speed, laden/unladen		km/h	11/12
5.2	Lift speed, laden/unladen		m/s	0.29/0.36
5.3	Lowering speed, laden/unladen		m/s	0.4/0.43
5.8	Max. gradeability, laden/unladen		%	15/15
5.10	Service brake			Mechanical/Hydraulic
5.11	Parking brake			Mechanical
6.1	Drive motor rating S2 60 min		kW	10
6.2	Lift motor rating at S3 15%		kW	16
6.4	Battery voltage/nominal capacity		V/Ah	80V280AH

Copyright 2026 EP Equipment. All rights reserved. | Datasheet last updated 2026-09-15

	SPECIFICATION	REF	UNIT	VALUE
6.4.1	Battery voltage		V	80
6.4.2	Battery nominal capacity K5		Ah	280
6.4.3	Battery type			Li-Ion
6.6	Energy consumption according to DIN EN 16796		kWh/h	7.95 [1)]
6.7	Turnover output according to VDI 2198		t/h	203
6.8	Turnover efficiency according to VDI 2198		t/kWh	25.53
8.1	Type of drive unit			PMSM
10.1	Operating pressure for attachments		bar	180
10.2	Oil volume for attachments		ℓ/min	40
10.5	Steering design			Hydraulic
10.7	Sound pressure level at the driver's seat		dB(A)	74

Subject to modification of specifications and designs without prior notice as part of continuous product improvement. Images and technical data shown may include optional features and are provided for reference only. All dimensions are subject to standard manufacturing tolerances.

VDI Drawing

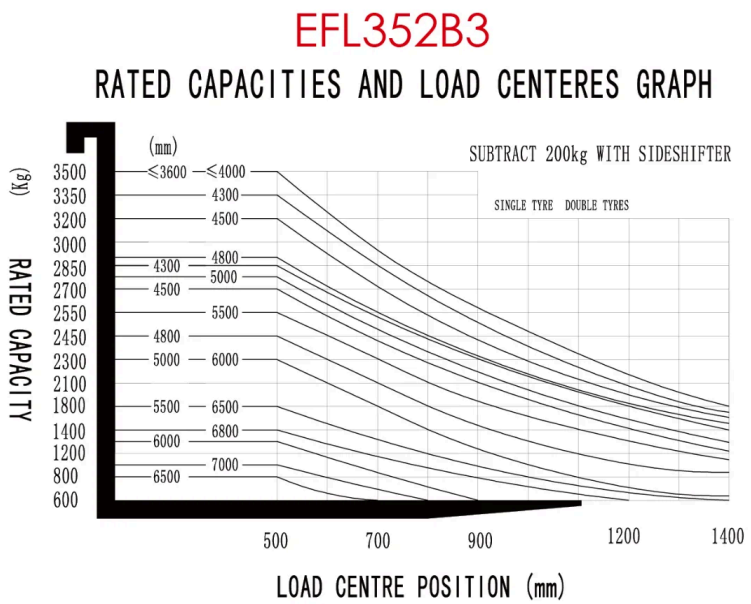

Copyright 2026 EP Equipment. All rights reserved. | Datasheet last updated 2026-09-15

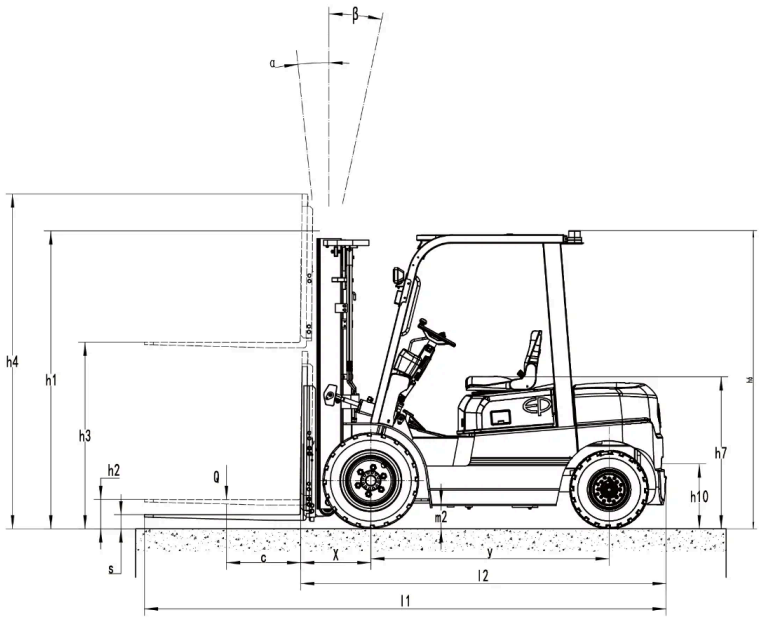

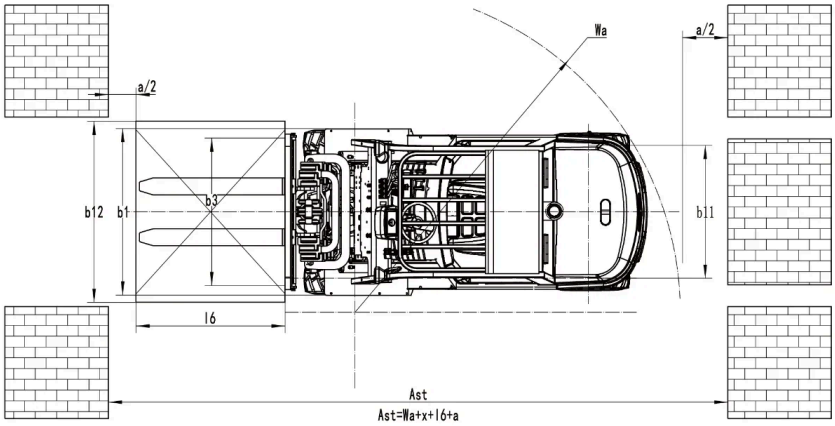

Mast Options

MAST TYPE	LIFT HEIGHT (H3, MM)	MAST LOWERED HEIGHT (H1, MM)	MAST EXTENDED HEIGHT, NO BACKREST (H4, MM)	MAST EXTENDED HEIGHT, WITH BACKREST (H4, MM)	FREE LIFT HEIGHT, NO BACKREST (H2, MM)	FREE LIFT HEIGHT, WITH BACKREST (H2, MM)
2-Standard Mast	2700	1910	3300	3795	120	120
2-Standard Mast	3000	2060	3630	4095	120	120
2-Standard Mast	3300	2210	3930	4395	120	120
2-Standard Mast	3500	2310	4130	4595	120	120
2-Standard Mast	3600	2360	4230	4695	120	120

Copyright 2026 EP Equipment. All rights reserved. | Datasheet last updated 2026-09-15

MAST TYPE	LIFT HEIGHT (H3, MM)	MAST LOWERED HEIGHT (H1, MM)	MAST EXTENDED HEIGHT, NO BACKREST (H4, MM)	MAST EXTENDED HEIGHT, WITH BACKREST (H4, MM)	FREE LIFT HEIGHT, NO BACKREST (H2, MM)	FREE LIFT HEIGHT, WITH BACKREST (H2, MM)
2-Standard Mast	4000	2610	4630	5095	120	120
2-Standard Mast	4300	2760	4930	5395	120	120
2-Standard Mast	4500	2860	5130	5595	120	120
2-Free Mast	3000	2040	3630	4095	1410	945
2-Free Mast	3300	2190	3930	4395	1560	1095
2-Free Mast	3600	2340	4230	4695	1710	1245
3-Free Mast	4300	2040	4930	5395	1410	945
3-Free Mast	4500	2120	5130	5595	1490	1025
3-Free Mast	4800	2225	5430	5895	1595	1130
3-Free Mast	5000	2310	5630	6095	1680	1215
3-Free Mast	5500	2560	6130	6595	1930	1465
3-Free Mast	6000	2810	6630	7095	2180	1715

Options

ITEM	OPTIONS (optional items marked in yellow)
Fork dimension	122*50*1070 | 122*50*1150 | 122*50*1220 | 122*50*1370 | 122*50*1520 | 122*50*1600 | 122*50*1670 | 122*50*1820 | Can be customized
Front wheel material	Pneumatic | Normal solid | Non-making solid
Rear wheel material	Pneumatic | Normal solid | Non-making solid
Battery capacity	80V280AH | 80V410AH | 80V460AH (Non-CE)
Charger	80V60A External charger | 80V35A Intergrated charger | 80V100A External charger | 80V150A External charger | 80V200A External charger
Battery indicator	With hourmeter (Bluetooth)
Seat type	Regular | Comfortable | Suspension | Regular + safety belt logic switch | Comfortable + safety belt logic switch | Suspension + safety belt logic switch | Suspension with armrest + safety belt logic switch | Suspension with armrest | KL01 with armrest
Attachments	No | Built-in sideshifter | External sideshifter | Fork positioner with sideshift
Traction pin	Yes and not customized

Copyright 2026 EP Equipment. All rights reserved. | Datasheet last updated 2026-09-15

ITEM	OPTIONS (optional items marked in yellow)
Electrostatic chain	Yes and not customized
Front lamp	LED
Rear lamp	No | LED
Warning lamp	LED
Steering lamp	LED
Blue lamp	No | Rear | Front and rear
Area warning lamp	No | Both sides | Both sides and rear
Rearview mirror	One in front | Two on sides and one in front
OPS system	Yes and not customized
USB interface	No | USB TYPE A/C
Telematics	Yes and not customized
Cabin	No | Basic half cabin | Upgrade half cabin | Full cabin
Overhead guard	With tempered glass
AS/NZS function package	No | Yes and not customized
Heating system during lithium battery charging	No | Yes and not customized
Operator identification device	NO | Card reader
Lifting electronic limit	No | Yes and not customized
Hydraulic system operating mode	Mechanical lever
Rear armrest horn	No | Yes and not customized

Copyright 2026 EP Equipment. All rights reserved. | Datasheet last updated 2026-09-15